PS5312xx - Adjustable Pipe Stand

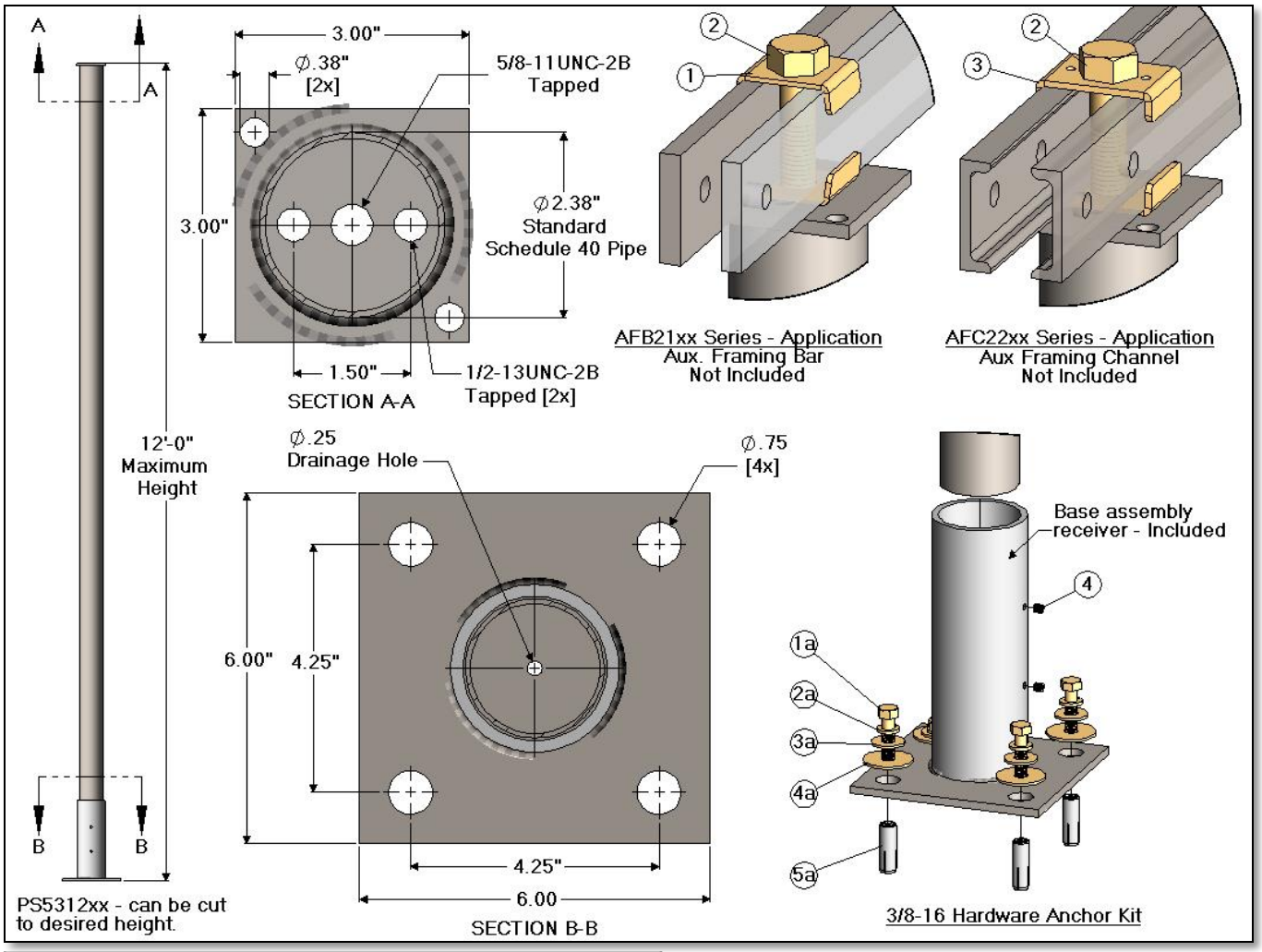

PS53 - Hardware Kit [Included in PS5312xx]			
Item	QTY	CSF P/N#	Description
1	2	FC313	Framing Clip [AFB21xx Series Application]
2	1	HH1207	5/8-11 HHCS x 2.50" Length
3	2	FC316	Framing Clip [AFC22xx Series Application]
4	2	SS0600	Socket Set Screw - 1/4-20 x 1/4" Length
5	2	HN148	5/8-11 Hex Nut [Not Shown]

DIA37K02 - Drop In Anchor Kit [3/8" Hardware] - [Included in PS5312xx]			
Item	QTY	CSF P/N#	Description
1a	4	HH1007	3/8-16 Hex Head Cap Screw x 1.50" Length
2a	4	LW156	3/8" Spring Lock Washer
3a	4	FW166	3/8" Flat Washer [1.00" O.D.]
4a	4	FW166F	3/8" Flat Washer [1.50" O.D.]
5a	4	DIA37	3/8-16 Drop In Anchor

Notes:
- Aux. Framing Bar - Not Included
- Aux. Framing Channel - Not Included
- PS5312xx - can be cut to desired height.
- Standard Schedule 40 Pipe
- PS5312xx includes mounting hardware for both Aux. Framing Bar and Aux. Framing Channel and drop in anchor kit [DIA37K02].
- Finish: Dark Gray or zinc yellow
- Hardware finish is zinc yellow.

Specifications subject to change. Please contact CSF Customer Service for more information.

© copyright 2004 Central Steel Fabricators, Inc. RVSD*05/20
http://www.centralsteelfab.com ◆ 2100 Parkes Drive, Broadview, IL 60155
Phone: 708-652-2037 Fax: 855-652-7010