FC316s - Auxiliary Framing Channel Slotted Framing Clip

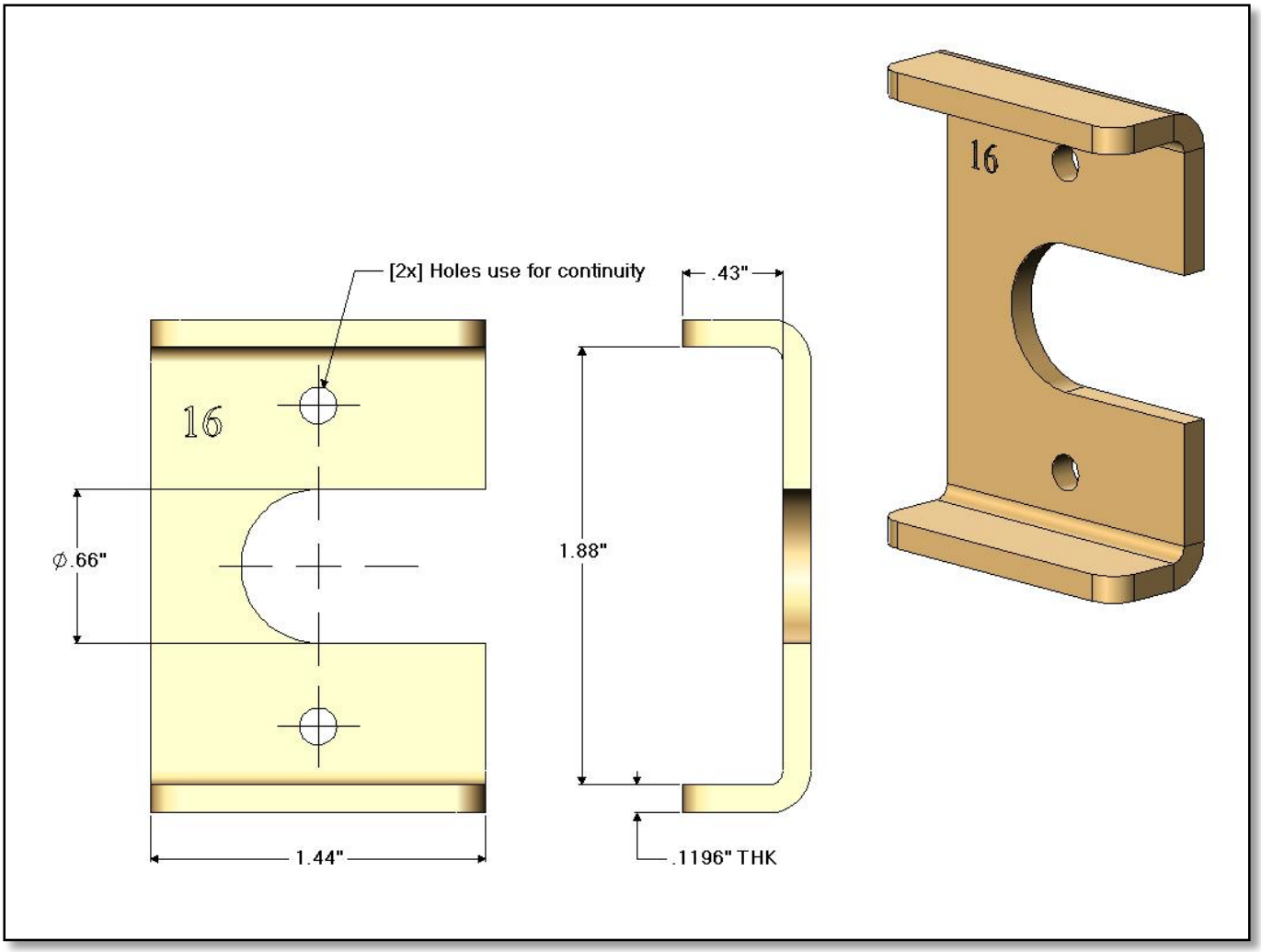

FC316s - Auxiliary Framing Channel Slotted Framing Clip	
CSF P/N#	Description
FC316s	Auxiliary Framing Channel Slotted Framing Clip

Notes:
- [2x] Holes use for continuity
- Finish: zinc yellow

RVSD*0119

Specifications subject to change. Please contact CSF Customer Service for more information.

© copyright 2004 Central Steel Fabricators, Inc.
http://www.centralsteelfab.com ◆ 2100 Parkes Drive, Broadview, IL 60155
Phone: 708-652-2037 Fax: 855-652-7010