ACS07K - Aux. Framing Bar Splice Kit - 5/8" Hardware

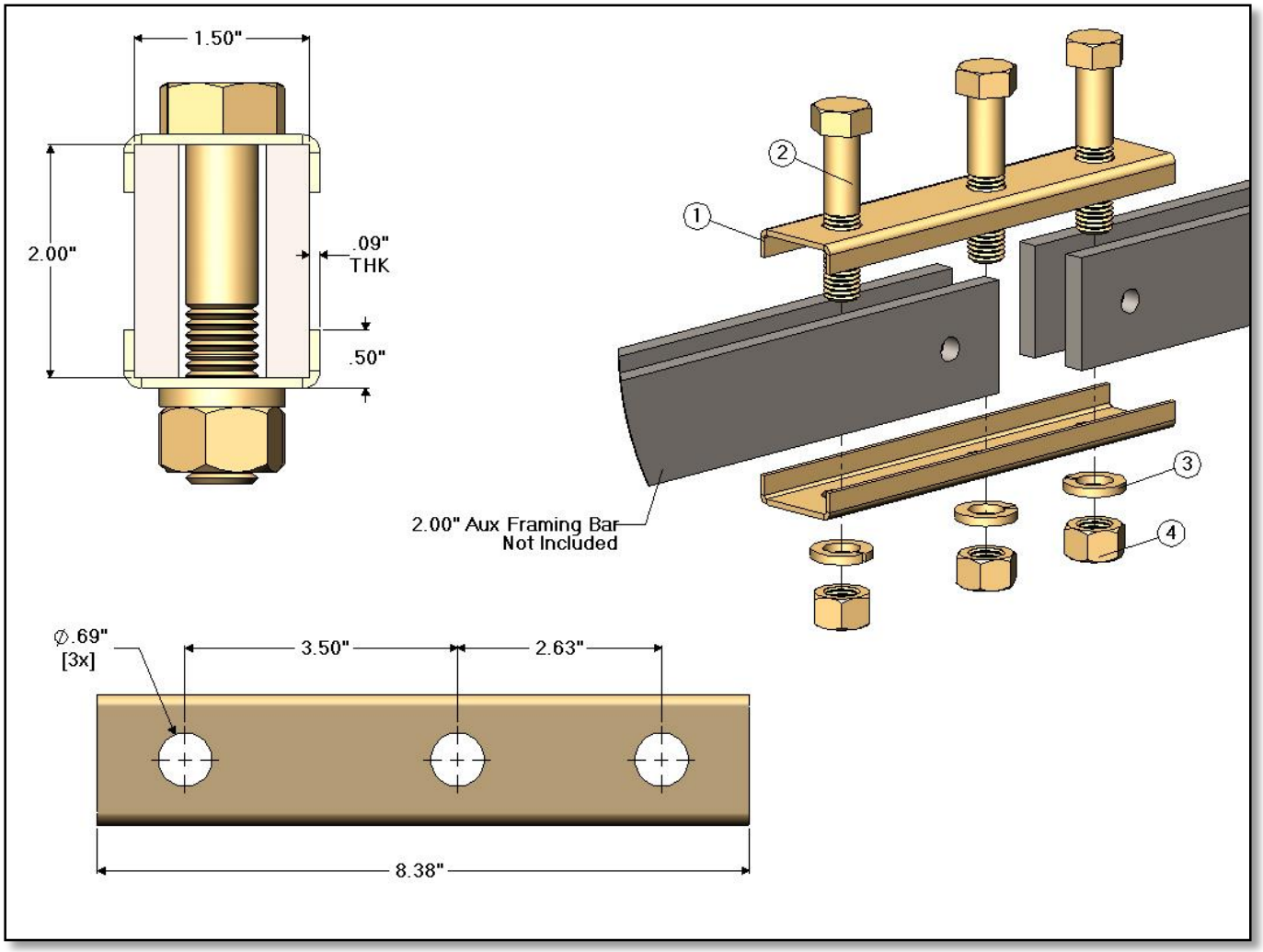

ACS07K - Aux. Framing Bar Splice Kit - 5/8" Hardware			
Item	CSF P/N#	QTY	Description
1	ACS09	2	Auxiliary Framing Bar Splice
2	HH1209	3	5/8-11 HHCS X 3.00" Length
3	LW158	3	5/8" Spring Lock Washer
4	HN148	3	5/8" Hex Nut

Notes:
- Finish: zinc yellow
- All hardware is zinc yellow
- Aux Framing Bar - Not Included

Specifications subject to change. Please contact CSF Customer Service for more information.
© copyright 2004 Central Steel Fabricators, Inc. RVSD*02/20
http://www.centralsteelfab.com ◆ 2100 Parkes Drive, Broadview, IL 60155
Phone: 708-652-2037 Fax: 855-652-7010